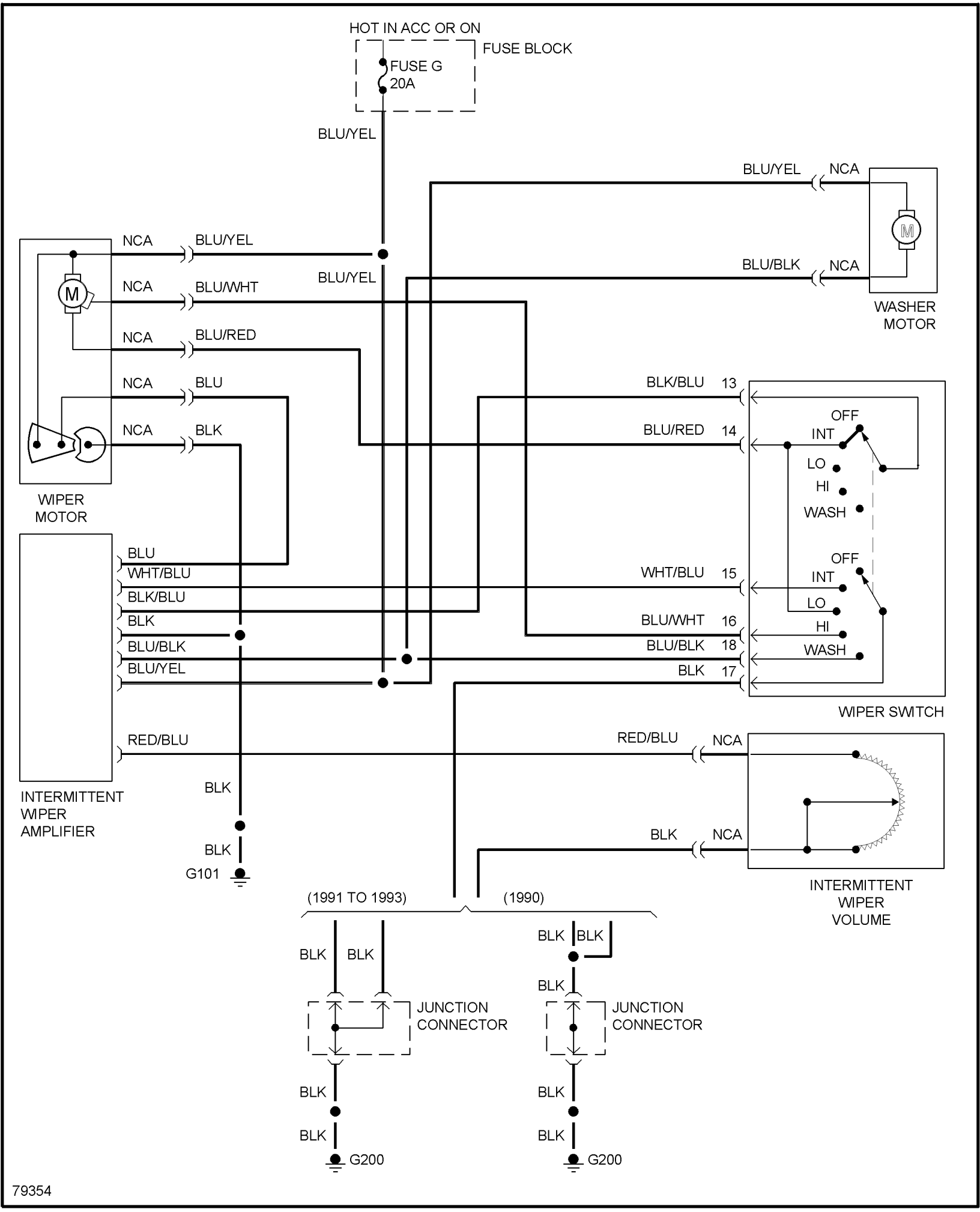
HOT IN ACC OR ON
FUSE BLOCK
FUSE G
20A
BLU/YEL
BLU/YEL
NCA
BLU/BLK
NCA
WASHER MOTOR
NCA
BLU/YEL
NCA
BLU/WHT
BLU/YEL
NCA
BLU/RED
NCA
BLU
NCA
BLK
WIPER MOTOR
BLK/BLU
13
BLU/RED
14
OFF
INT
LO
HI
WASH
OFF
INT
LO
HI
WASH
WHT/BLU
15
BLU/WHT
16
BLU/BLK
18
BLK
17
WIPER SWITCH
BLU
WHT/BLU
BLK/BLU
BLK
BLU/BLK
BLU/YEL
RED/BLU
INTERMITTENT WIPER AMPLIFIER
BLK
BLK
G101
RED/BLU
NCA
BLK
NCA
INTERMITTENT WIPER VOLUME
(1991 TO 1993)
(1990)
BLK
BLK
JUNCTION CONNECTOR
BLK
BLK
G200
BLK
BLK
BLK
JUNCTION CONNECTOR
BLK
BLK
G200
79354